Department of Building and Zoning
Deck Handout for
ONE AND TWO FAMILY CONSTRUCTION

In an effort to ensure decks are constructed in a safe and appropriate manner in accordance with adopted code regulations this handout was developed. Contained within are prescriptive construction methods and materials that must be adhered too. Any deviations requested will be reviewed on a case-by-case basis and depending on the issue may require additional details and/or plans provided by a Licensed Structural Engineer. The provisions contained herein are based on the 2006 International Residential Code, 2007 Supplemental Analysis, and adopted Zoning regulations. This handout does not replace the code.

This handout is applicable only for single level decks not more than 14 feet above grade and WITHOUT a roof*.

*A Sun Shade or any other construction of horizontal framing members installed above the finished floor surface of a deck or the top elevation of grade is considered a roof.
Exception – retractable sunshade attached to house

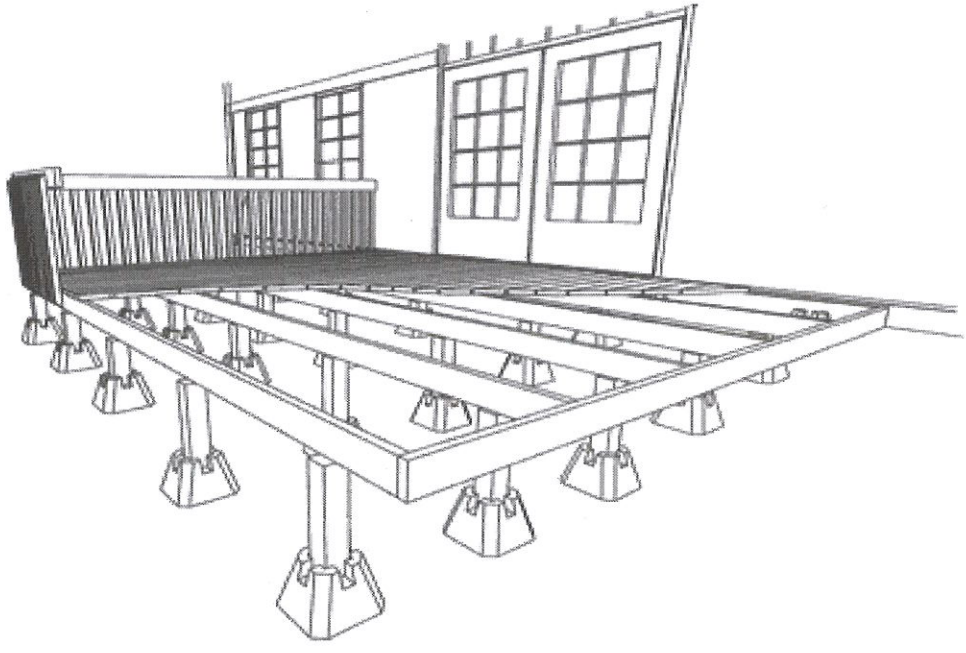

Submittal Requirements and General Permit Information:

- A building permit is required for the construction of any deck including the replacement of any deck whether the replacement is of the same size or less in dimension. The permit holder as well as the owner of the property has responsibility.
- A site plan is required to be provided. This is a drawing of a "birds eye view" overlooking your property. The drawing needs to show the outline of the dwelling and the proposed outline of the deck. Each side of the proposed deck area needs to have a dimension indicated. The distance from the proposed deck to the property lines also needs to be indicated on the site plan as well as the location of any accessory buildings (structures other than the home located on your property).

EXAMPLE SITE PLAN

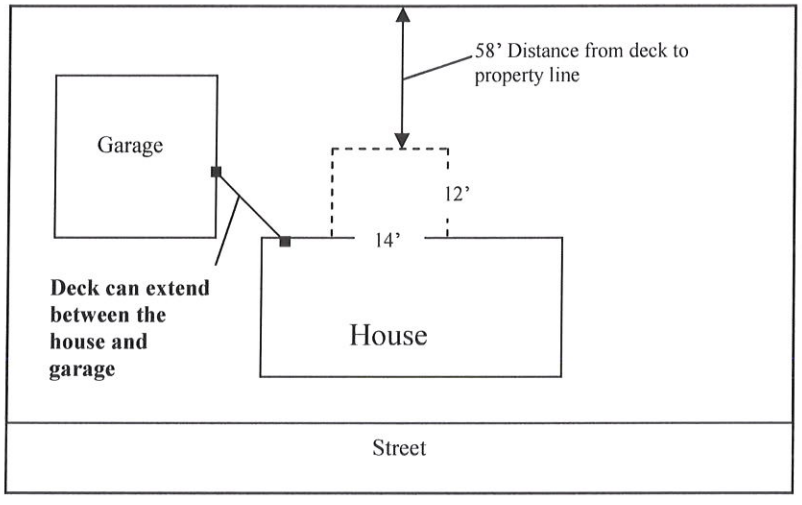

- A deck permit fee is based on the size of the deck. The minimum permit fee is $54.00. An estimate of the permit costs may be obtained by calling the Building and Zoning Department at 515-967-5138.
- Prior to digging for any footings you need to contact Iowa One Call at 1-800-292-8989. The utilities located on your property will be identified within 48 hours of the call. This service is at no cost to you and is mandated by Iowa Law.
- Decks are not allowed to be used or occupied prior to a final inspection and approval from this department.

Inspections:

- Inspections are required to be conducted throughout the construction process. It is the responsibility of the property owner or owners' assigned agent as listed on the permit to contact staff for an inspection. A placard will be provided with the building permit. This placard will identify the inspectors' name and telephone number that will be assigned to your project. A day prior notice must be provided when scheduling an inspection.
- Required inspections are listed as follows:
  1. Footing inspection prior to the placement of any concrete.
  2. **Ledger board attachment must be inspected** – This can be done either at the footing inspection stage or the framing stage. Ledger board must be visible and

accessible from the inside/interior of the dwelling, for inspection, even if the **basement/lower level is finished.**

3. Framing inspection if the deck finished floor level is less than 48" above grade or if the deck is enclosed underneath.
4. Final inspection. If the deck is 48" or more above adjacent grade and not enclosed underneath then a framing and final inspection can be conducted at the same time.

Fastener Requirements: Beam and Post/ Joist to Beam/ others

- All lumber shall be identified by the grade mark of, or certificate of inspection issued by, an approved lumber grading or inspection bureau or agency. All lumber shall be a naturally durable species, such as Redwood or Western Cedar or be pressure treated with an approved process and preservative in accordance with American Wood Protection Association Standards. All lumber in contact with the ground shall be rated as "ground-contact." **Please note not all "treated lumber" is rated for ground contact.**
- All nails shall meet the requirements of ASTM F1667. Wood screws shall meet the requirements of ANSI/ASME Standard B18.6.1. Bolts and Lag screws shall meet the requirements of ANSI/ASME B18.2.1.
- To resist corrosion, the following is required:
  - All screws, bolts, and nails shall be hot-dipped galvanized, stainless steel, silicon bronze or copper. Fasteners to be hot-dipped galvanized shall meet the requirements of ASTM A153, Standard Specification for Zinc Coating (Hot-Dip) on Iron and Steel Hardware, Class D for fasteners 3/8" in diameter and smaller or Class C for fasteners with diameters over 3/8".
  - Fasteners other than nails and timber rivets shall be permitted to be of mechanically deposited zinc-coated steel with coating weights in accordance with ASTM B695, Class 55 minimum.
  - All hardware (joist hangers, cast-in-place post anchors, etc.) shall be galvanized or shall be stainless steel. Hardware to be hot-dipped prior to fabrication shall meet ASTM A653, Standard Specification for Steel Sheet, Zinc-Coated (Galvanized) or Zinc-Iron Alloy-Coated (Galvannealed) by the Hot-Dip Process, G-185 coating. Hardware to be hot-dipped galvanized after fabrication shall meet ASTM A123, Specification for Zinc (Hot-Dip Galvanized) Coatings on Iron and Steel Products.
  - Other coated or non-ferrous fasteners or hardware shall be as approved by the building official.

- Flashing shall be corrosion-resistant metal of minimum nominal 0.019-inch thickness or approved non-metallic material.

OVER VIEW OF TYPICAL DECK LAYOUT/FRAMING PLAN

FIGURE 1

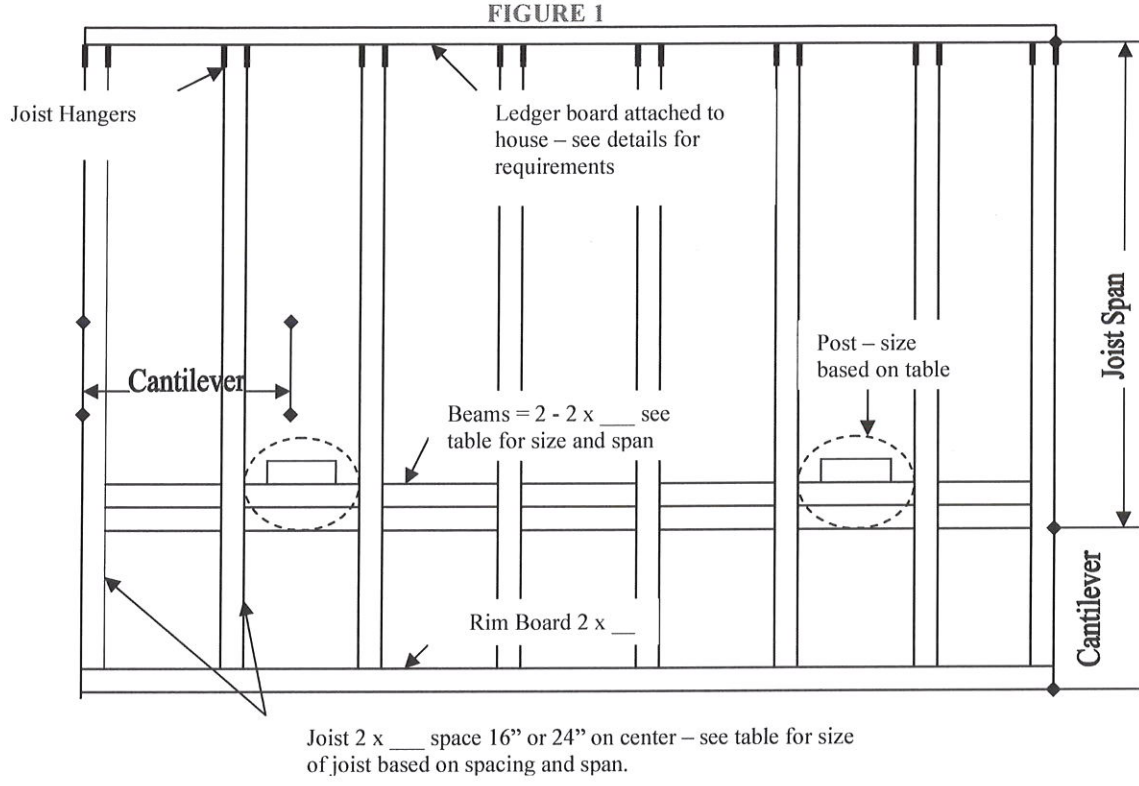

Footings: There are several different options for footings, either ones placed 42" below finished grade or footings that float on the ground.

When Required - Footings are required to be 42" below grade if meeting one or more of the following:

Deck platform is more than 30" (2.5 feet) above the adjoining grade;
Deck is physically attached to the dwelling/structure
Deck is more than 400 square feet in area
Decks constructed on a sloped grade may require footings depending on severity of sloping surface – MUST CONTACT INSPECTOR PRIOR TO FOOTINGS

NOTE: Footings must be placed on undisturbed soils or engineered fill. All vegetation and organic material must be cleared from underneath any footing.

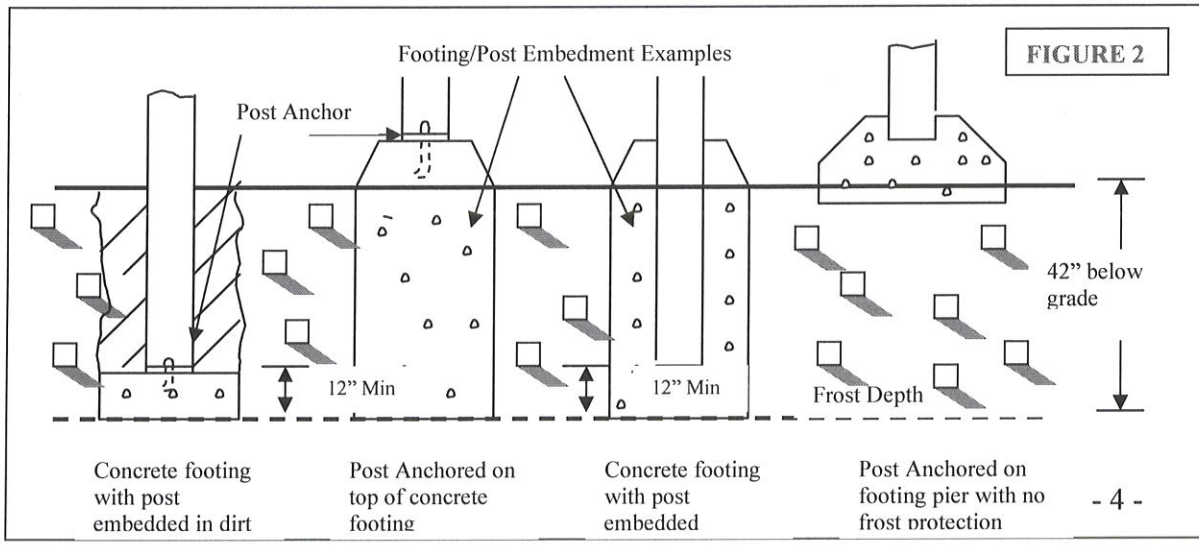

Size/Diameter - The size/diameter of the footings is based on length of joists and beam supporting points. Based on your beam width and the length of your joists (including cantilever) you will be able to determine the minimum required footing size for all footings.

FOOTING DIAMETERS (In Inches)												
		BEAM SPAN (Distances measured from Post to Post)										
		4'	5'	6'	7'	8'	9'	10'	11'	12'	13'	14'
JOIST SPAN (Overall length of joist)	4'	8"	8"	10"	10"	10"	10"	10"	12"	12"	12"	12"
	5'	8"	10"	10"	10"	12"	12"	12"	12"	12"	14"	14"
	6'	10"	10"	10"	12"	12"	12"	12"	14"	14"	14"	16"
	7'	10"	10"	12"	12"	12"	12"	12"	14"	14"	16"	16"
	8'	10"	10"	12"	12"	14"	14"	14"	16"	16"	18"	18"
	9'	10"	12"	12"	14"	14"	16"	16"	16"	18"	18"	20"
	10'	10"	12"	12"	14"	14"	16"	16"	18"	18"	20"	20"
	11'	12"	12"	14"	14"	16"	16"	18"	20"	20"	Eng	Eng
	12'	12"	12"	14"	16"	16"	16"	18"	20"	Eng	Eng	Eng
	13'	12"	14"	14"	16"	18"	18"	20"	Eng	Eng	Eng	Eng
	14'	12"	14"	16"	16"	18"	20"	20"	Eng	Eng	Eng	Eng
	15'	12"	14"	16"	18"	18"	20"	Eng	Eng	Eng	Eng	Eng
	16'	14"	14"	16"	18"	20"	Eng	Eng	Eng	Eng	Eng	Eng
	17'	14"	16"	16"	18"	20"	Eng	Eng	Eng	Eng	Eng	Eng
	18'	14"	16"	18"	20"	Eng	Eng	Eng	Eng	Eng	Eng	Eng

*Footing sizes are based on loads applied to support system and soil bearing.

1. It is assumed that the Live Load is 40 psf and Dead Load is 10 psf and a soil bearing of 2000 psf.
2. No roof loads have been factored in the above calculations. Larger sizes or engineering may be required if constructing a roof.

Ledger Board: The Ledger Board is the board that supports the ends of the floor joists and is attached to the structure (attached against the house). Below are some approved examples of Ledger attachments.

The ledger board shall be properly attached and secured to the structure in accordance with figure 3, 4, or 5. The existing structure must be capable of supporting the new deck platform; this must be confirmed during inspections. If it is determined by staff that the existing structure is incapable of supporting the new construction then either engineering must be submitted to this office for review or a beam/post configuration must be constructed (free standing deck) in lieu of the ledger board.

The exterior finish materials (siding) must be removed prior to the installation of the ledger board. Flashing is required where exterior porches, decks, or stairs attach to a wall or floor assembly of wood-framed construction. Flashing shall be installed to prevent the entrance of water as well as provide a means for the water to drain away from the structure.

NOTE: The maximum height between the top of decking to the top of a doorway threshold is 7 ¾".

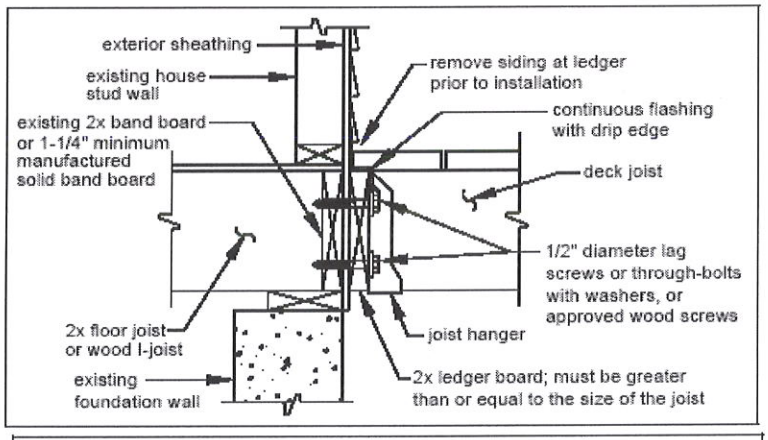

FIGURE 3
Here the Ledger is attached to the rim board of the house. The rim board is either 2 x conventional lumber or 1 1/4 inch engineered/manufactured lumber material. This is a "typical" setup that you will encounter with the majority of homes.

(Please refer to Ledger Attachment Schedule for required amount of bolts/lags)

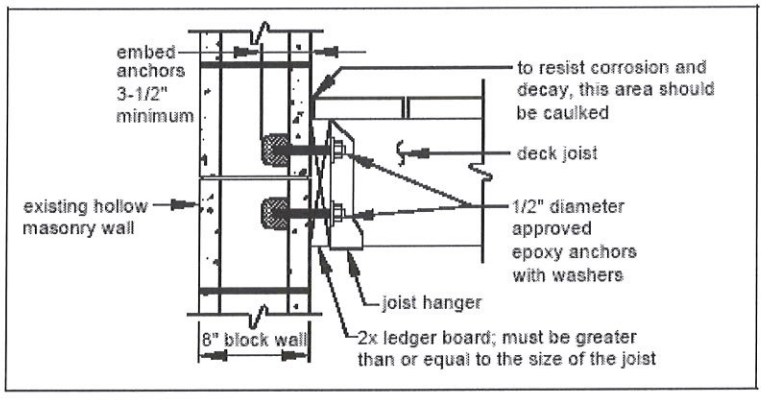

FIGURE 4
Here the Ledger is attached to a concrete masonry wall.

(Please refer to Ledger Attachment Schedule for required amount of bolts/lags)

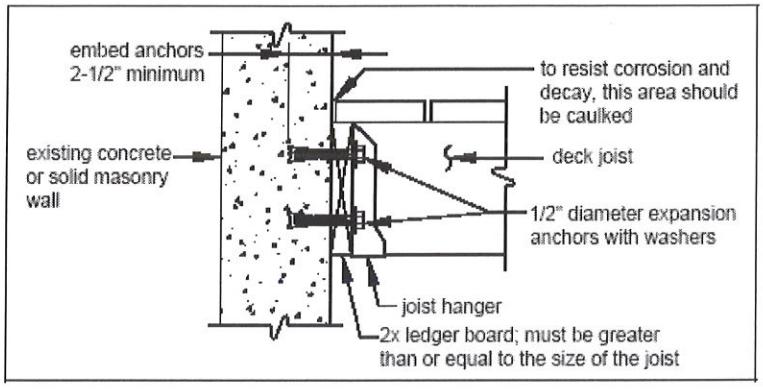

FIGURE 5
Here the Ledger is attached to a cast in place concrete wall.

(Please refer to Ledger Attachment Schedule for required amount of bolts/lags)

Non-Approved Methods - Ledgers are not allowed to be connected in the following manner unless approved by a Structural Engineer licensed with the State of Iowa. All engineering must be submitted to this office prior to inspection.

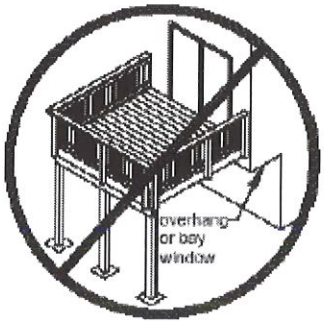

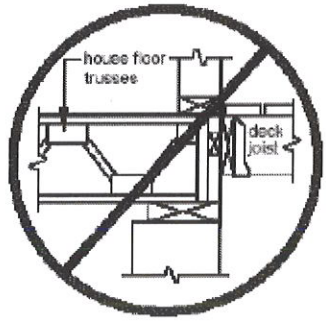

Manufactured Housing Units
A deck cannot be attached to any manufactured home unless accompanying documentation from the factory is provided. This documentation must provide attachment details and be approved by a Structural Engineer licensed with Iowa.

I-Joists:

Several new homes are constructed with wood I-Joists and include a 1" or thicker structural composite lumber (SCL) or laminated veneer lumber (LVL) band joist [rim board] that can support the attachment of a wood deck. Attn: Some homes may be constructed with band joists that are too thin (3/4" or thinner) to support a deck. In these cases structural engineering will need to be provided or a freestanding deck will need to be constructed.

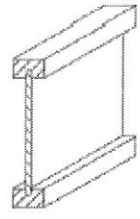

Manufactured Wood Truss:

A metal plate connected wood truss is a structure specific, engineered wood product. The trusses are often connected with a 2x4 lumber "ribbon" at the ends of trusses. The purpose of which is to tie the ends of the trusses together to form a more stable floor platform system. The ribbon board alone is not intended to support a deck ledger and deck. If constructing a deck with this type of floor system you will need to submit plans and specifications from a structural engineer, construct a free standing deck or provide plans showing some other approved means of structural support. For more information on this product please visit www.sbcindustry.com.

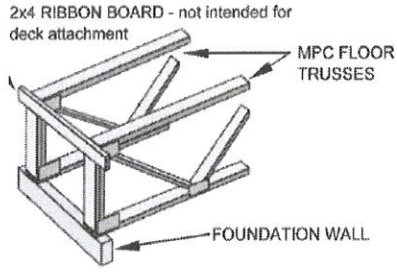

Ledger Attachment Schedule – See the table below and Figure 6 for attachment requirements.

FASTENER SPACING FOR A SOUTHERN PINE OR HEM-FIR DECK LEDGER AND A 2-INCH NOMINAL SOLID-SAWN SPRUCE-PINE-FIR BAND JOIST. [c,e,]
(Deck Live Load = 40 psf, Deck Dead Load = 10psf)

Joist Span	6'-0" and Less	6'-1" to 8'-0"	8'-1" to 10'-0"	10'-1" to 12'-0"	12'-1" to 14'-0"	14'-1" to 16'-0"	16'-1" to 18"'-0"
Connection Details	On-Center Spacing of Fasteners in Inches[d]						
1/2" diameter lag screw with 15/32" maximum sheathing[a]	30	23	18	15	13	11	10
1/2" diameter bolt with 15/32" maximum sheathing.	36	36	34	29	24	21	19
1/2 " diameter bolt with 15/32" maximum sheathing and 1/2' stacked washers[b,f]	36	36	29	24	21	18	16
LedgerLok[g]	16	12	10	8	7	6	5

For SI: 1 inch = 25.4, 1 foot = 304.8 mm. 1 pound per square foot = 0.0479kN/m^2

a. The tip of the lag screw shall fully extend beyond the inside face of the band joist.
b. The maximum gap between the face of the ledger board and face of the wall sheathing shall be ½".
c. Ledgers shall be flashed to prevent water from contacting the house band joist.
d. Deck ledger shall be at least greater than or equal to the depth of that of the floor joists used or as established by standard engineering practice.
e. When solid-sawn pressure-preservative-treated deck ledgers are attached to engineered wood products (structural composite lumber rimboard or laminated veneer lumber), the ledger attachment shall be designed in accordance with accepted engineering practice.
f. Wood structural panel sheathing, gypsum board sheathing or foam sheathing not exceeding 1 inch in thickness shall be permitted. The maximum distance between the face of the ledger board and the face of the band joist shall be 1 inch.
g. See page 9 regarding LedgerLok.

FIGURE 6

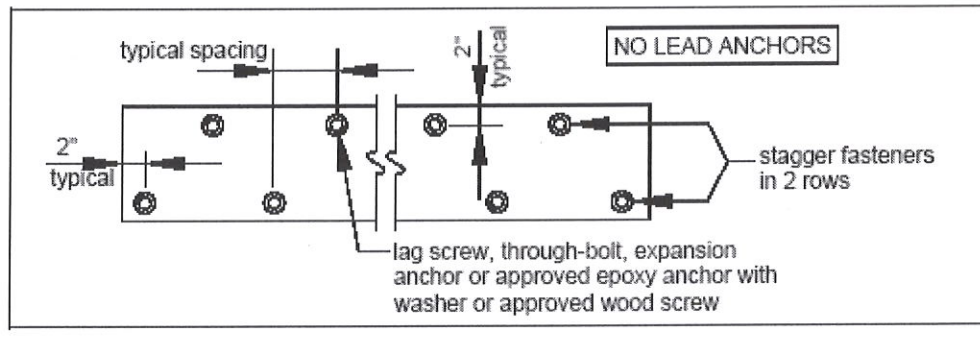

Thru-Bolts – Thru-bolts shall have a minimum diameter of ½". Pilot holes for thru-bolts shall be 17/32" to 9/16" in diameter. Thru-bolts must be equipped with washers at the bolt head and nut.

Expansion Anchors – Use expansion anchors when attaching a ledger board to a concrete or solid masonry wall as shown in Figure 5. Bolt diameters of the anchors shall be a minimum of ½". Minimum embedment length shall be per the manufacturers recommendations. Expansion anchors must have washers.

Epoxy Anchors – When attaching to hollow masonry, fill the cells with grout and use expansion anchors, or use one of the approved epoxy anchors listed and install as shown in Figure 4. Epoxy anchors shall have a minimum diameter of ½" and minimum embedment length of 3 ½".

Installation shall be in strict conformance to the manufacturer's instructions. Epoxy anchors must have washers.

APPROVED EPOXY ANCHORS

Manufacturer	Product
ITW Ramset/Red Head	Epcon Acrylic 7
Hilti	HY-20

Lag Screws – Lag Screws shall have a minimum diameter of ½" and shall be hot dipped galvanized or stainless steel. Lag screws may be used only when the field conditions match those shown in Figure 3. **You must verify the existing conditions in the field prior to applying for a building permit and installing lag screws. Compliance with all the requirements herein is critical to ensure the structural stability of your deck.** See below for lag screw length and shank requirements. All lag screws shall be installed with washers.

FIGURE 7

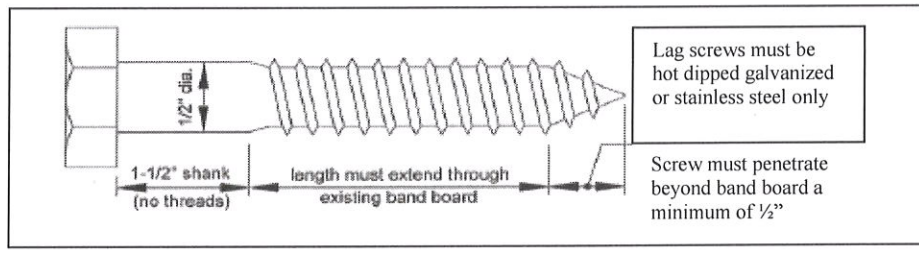

Lag Screw installation requirements: Each lag screw shall have pilot holes drilled as follows

1. Drill a ½" diameter hole in the ledger board;
2. Drill a 5/16" diameter hole into the solid connection material of the existing house

Note: DO NOT DRILL A 1/2" DIAMETER HOLE INTO THE SOLID CONNECTION MATERIAL.

The threaded portion of the lag screw shall be inserted into the pilot hole by turning. DO NOT DRIVE WITH A HAMMER. Use soap or a wood-compatible lubricant as required to facilitate tightening. Each lag screw shall be thoroughly tightened.

LedgerLok – LedgerLok by FastenMaster, a proprietary fastener listed by ICC-ES, is similar to a lag screw. LedgerLoks have a diameter less than ¼" and an integrated washer. No pilot hole is required for installation. LedgerLoks shall be of sufficient length to fully penetrate the existing house band board and shall be installed in strict conformance with the manufacturer's instructions. Not designed for concrete or masonry installations. For further information please visit www.fastenmaster.com.

Joists: Joists are sized based on their span length and spacing between adjacent joist members. The span length is the distance of the joists from one bearing point to another bearing point. Cantilevers (Overhangs) are not counted in determining joist sizes, however for footing sizes the cantilevers are added. See footing table.

FIGURE 8

Free Standing Deck

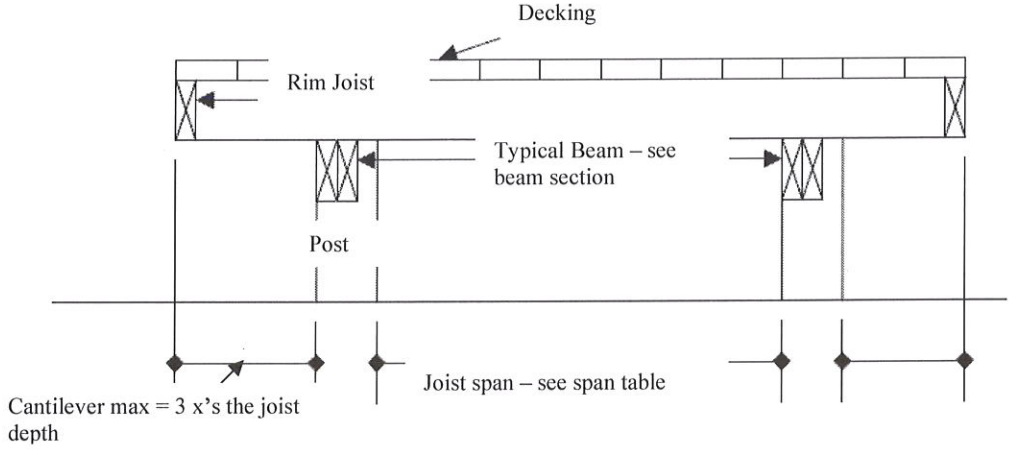

Deck attached to house via Ledger board

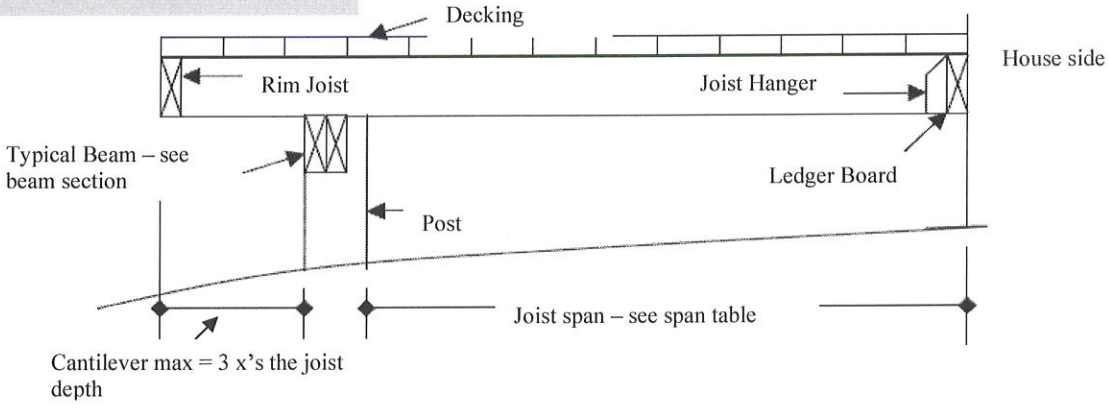

As shown above in the examples the joist can either be attached to a ledger board, over a beam or attached to the side of a beam via joist hangers. Please refer to the beam portion of this handout for more details.

Joists Spans – (Excludes overhangs)[a]

Moisture content exceeds 19%

Southern Pine			Douglas Fir-Larch, Hem-Fir, SPF		
Size of Joist	**Spacing (inches on center)**	**No. 2 Grade**	**Size of Joist**	**Spacing (inches on center)**	**No. 2 Grade**
2 x 6	12"	10-4	2 x 6	12"	9-6"
	16"	9-5		16"	8'-4"
	19.2"	8-9		19.2"	7'-7"
	24"	7-10		24"	6'-10"
2 x 8	12"	13-8	2 x 8	12"	12-6"
	16"	12-5		16"	11'-1"
	19.2"	11-4		19.2"	10'-2"
	24"	10-2		24"	9'-1"
2 x 10	12"	17-5	2 x 10	12"	15'-8"
	16"	15-10		16"	13'-7"
	19.2"	14-8		19.2"	12'-5"
	24"	13-1		24"	11'-1"
2 x 12	12"	21-2	2 x 12	12"	18'-2"
	16"	18-10		16"	15'-9"
	19.2"	17-2		19.2"	14'-4"
	24"	15-5		24"	12'-10"

a. Wet Service Floor Joists (based on 40 PSF live load, 10 PSF dead load, normal duration, wet service conditions, and deflection: $\Delta = L/360$)

Joist to Beam Connections – Each joist shall be attached to the beam as shown below in Figure 9. Use Options 1 or 2 to attach the joist to the beam. Option 3 is available for the attachment of joists to the sides of beams **except** for the one prohibited as referred in Figure 14.

FIGURE 9

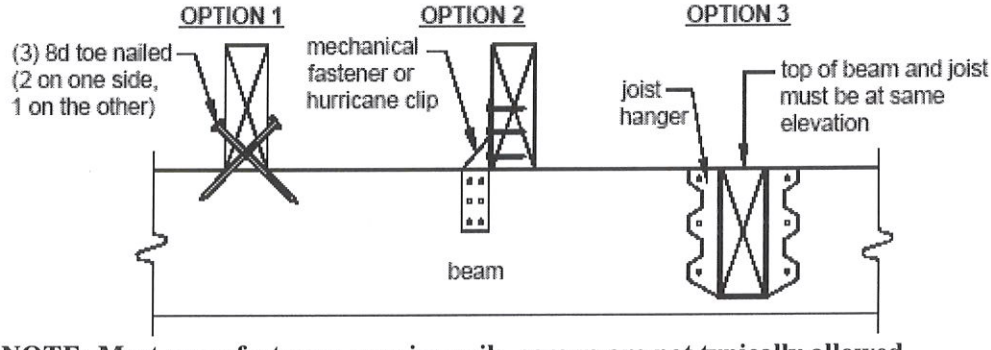

NOTE: Most manufacturers require nails, screws are not typically allowed.

Joist Hangers – Joist Hangers shall each have a minimum capacity of 800 lbs. The depth and width of the joist hanger shall equal the dimensions of the joist or header it's carrying. The joist hanger shall be selected from an approved manufacturer's product data based on the dimensions of the joist or header it is carrying. Use joist hangers with inside flanges when clearances to the edge of the beam or ledger board dictate. Joist hangers shall be galvanized. **Do not use clip angles or brackets to support framing members.**

FIGURE 10

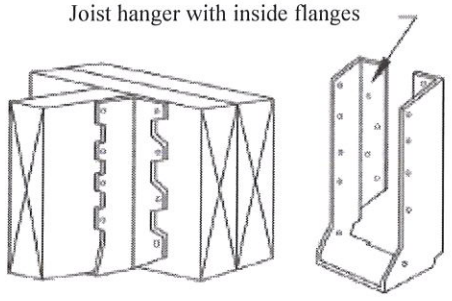

Beams: Beam sizes and spans are based on the joist spans; please refer to the table. Deck beams may extend beyond the posts (cantilever) a maximum of 2 feet. Joists are allowed to bear atop of the beam in these locations.

FIGURE 11

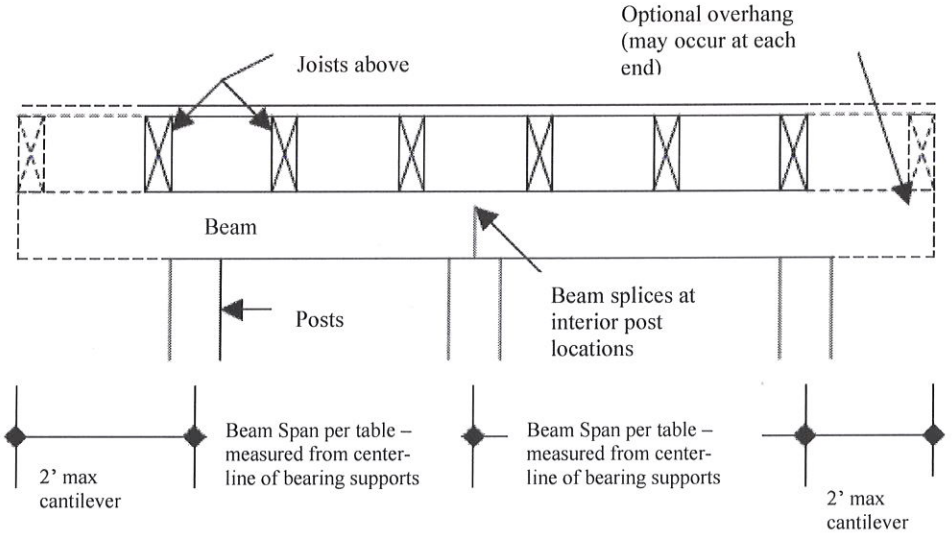

If the beam is constructed with multiple "2 x" members then the beam shall be assembled by attaching the members identified in the table above in accordance with Figure 12 below.

FIGURE 12

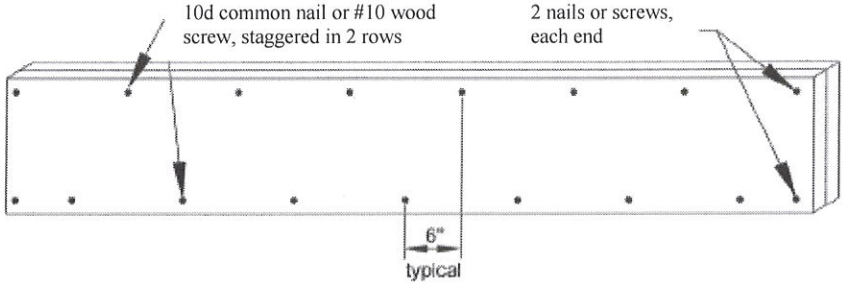

Deck Beam Spans[a]

		Joist Spans (feet) Less than or Equal to:						
Species	**Size**	6	8	10	12	14	16	18
Southern Pine	2-2x6	7'-1"	6'-2"	5'-6"	5'-0"	4'-8"	4'-4"	4'-1"
	2-2x8	9'-2"	7'-11"	7'-1"	6'-6"	6'-0"	5'-7"	5'-3"
	2-2x10	11'-10"	10'-3"	9'-2"	8'-5"	7'-9"	7'-3"	6'-10"
	2-2x12	13'-11"	12'-0"	10'-9"	9'-10"	9'-1"	8'-6"	8'-0"
	3-2x6	8'-7"	7'-8"	6'-11"	6'-3"	5'-10"	5'-5"	5'-2"
	3-2x8	11'-4"	9'-11"	8'-11"	8'-1"	7-6"	7'-0"	6'-7"
	3-2x10	14'-5"	12'-10"	11'-6"	10'-6"	9'-9"	9'-1"	8'-7"
	3-2x12	17'-5"	15'-1"	13'-6"	12'-4"	11'-5"	10'-8"	10'-1"
Douglas Fir-Larch, Hem-Fir, SPF	2-2x6	5'-8"	4'-11"	4'-4"	4'-0"	3'-8"	3'-5"	3'-0"
	2-2x8	7'-2"	6'-2"	5'-6"	5'-0"	4'-8"	4'-4"	4'-0"
	2-2x10	8'-9"	7'-7"	6'-9"	6'-2"	5'-8"	5'-4"	5'-0"
	2-2x12	10'-1"	8'-9"	7'-10"	7'-2"	6'-7"	6'-2"	5'-10"
	4x6	6'-8"	5'-9"	5'-2"	4'-9"	4'-4"	4'-1"	3'-10"
	4x8	8'-9"	7'-7"	6'-10"	6'-3"	5'-9"	5'-5"	5'-1"
	4x10	10'-9"	9'-4"	8'-4"	7'-7"	7'-1"	6'-7"	6'-3"
	4x12	12'-6"	10'-10"	9'-8"	8'-10"	8'-2"	7'-8"	7'-3"
	3-2x6	7'-4"	6'-8"	6'-2"	5'-9"	5'-4"	5'-0"	4'-8"
	3-2x8	9'-8"	8'-9"	7'-11"	7'-3"	6'-9"	6'-3"	5'-11"
	3-2x10	12'-4"	10'-10"	9'-8"	8'-10"	8'-2"	7'-8"	7'-3"
	3-2x12	14'-6"	12'-7"	11'-3"	10'-3"	9'-6"	8'-11"	8'-5"

a. 40 psf live load, 10psf dead load, L/360 simple span beam deflection limit, L/180 cantilever deflection limit, No. 2 grade, and wet service conditions.

Posts: Please refer to the table below for size of post to be used. The size of post is dependant upon the floor height above grade.

Post Size	Allowable Height	Additional Bracing Req.	Footings Required to be 42" below grade
4x4	0'-2.5'	No	No
4x6	2.5'-6'	Verify with Inspector	Yes
6x6	6'-14'	Yes	Yes

Post Connection – Post shall be centered on the footing. All cut ends of posts shall be field treated with an approved preservative. The beam shall be attached to the post by the following methods shown below in Figure 13. All thru-bolts shall have washers at the bolt head and nut.

FIGURE 13

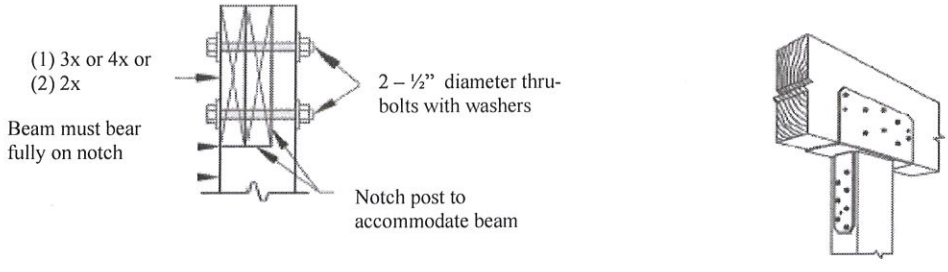

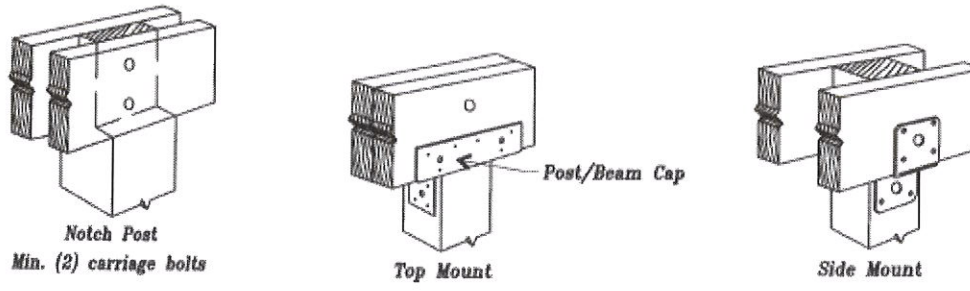

NOTE: <u>Other beam options are available please visit your local hardware store or our office.</u>

<u>Additional Bracing</u> – When additional bracing is required pursuant to the post table above then the bracing shall be provided both parallel and perpendicular to the beam at each post as shown in Figure 13. When parallel to the beam the bracing shall be bolted to the post at one end and beam at the other. When perpendicular to the beam, the bracing shall be bolted to the post at one end and a joist at the other. When a joist does not align with the bracing location, provide blocking between the next adjacent joists. **OTHER BRACING OPTIONS ARE AVAILABLE PLEASE CONTACT YOUR INSPECTOR FOR APPROVAL. <u>DEPENDANT UPON SITE CONDITIONS STAFF MAY REQUIRE BRACING EVEN IF NOT INDICATED ON THE POST TABLE.</u>**

FIGURE 14
ADDITIONAL BRACING REQUIREMENTS

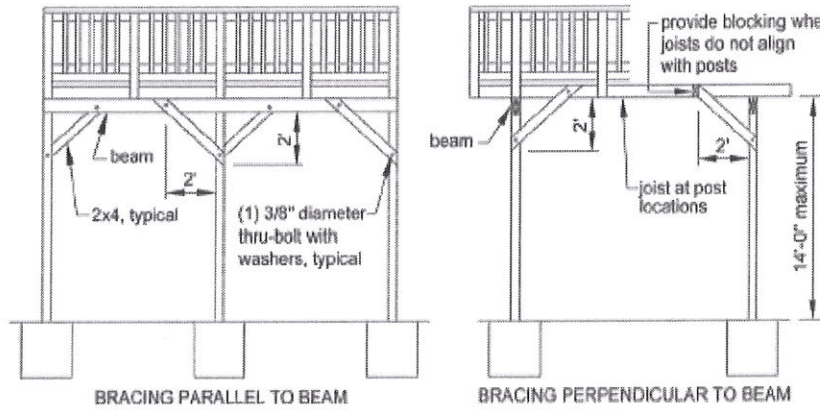

Decking and Rim Joist: Decking material shall be either 2x6 or 5/4 ("five-quarter") boards. The decking material shall be attached to each joist with either 2-8d nails or 2-#8 screws. A space of 1/8" should be placed between the deck boards. The attachment of the decking to the rim joist shall be as noted below.

<u>Plastic decking or other manufactured decking</u> - Shall be approved by the department prior to installation. A copy of the manufacturers reports or evaluation report from a third party agency must be submitted for review. This information must be present on the job site and available during the inspection process. Installation will be verified in accordance with the manufacturer's

instructions and listings of the product. All decking must be capable of supporting a live load of 40 pounds per square foot.

Rim Joist Attachment – Rim joists shall be attached to each floor joist with 4 #10 x 3 inch wood screws. The decking must be secured to the top of the rim joist with #10 x 3 inch wood screws at 6" on center.

FIGURE 15

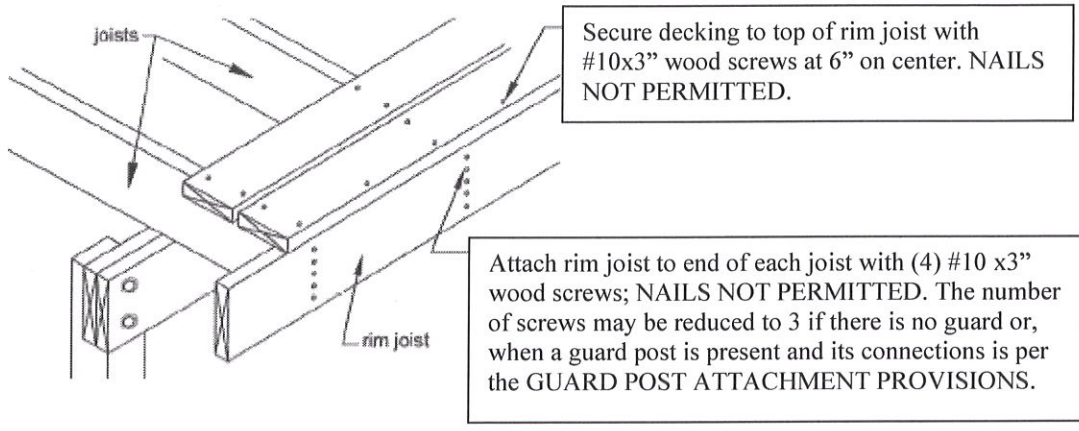

Guardrail Requirements: All decks that have a walking surface (floor surface) adjacent to an open side that measures more than 30" above the adjoining grade must have guards installed.

FIGURE 16

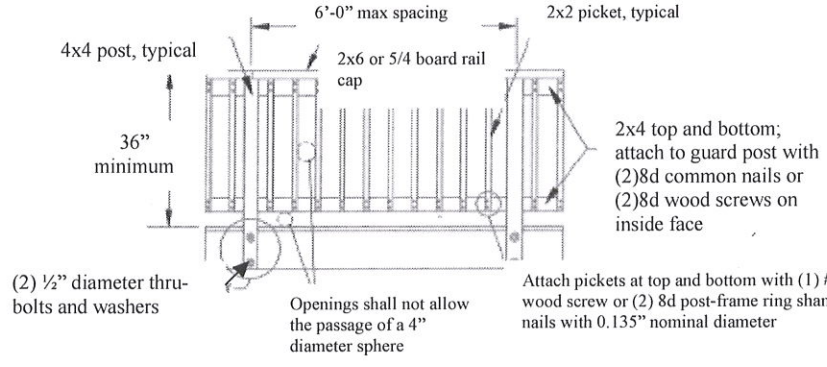

Load Requirements - All guard systems must be capable of supporting a single concentrated load of 200 pounds per square foot applied in any direction at any point along the top. All guard in fill components, balusters, and panel fillers shall be designed to withstand a horizontally applied normal load of 50 pounds on an area equal to 1 square foot. This load need not be assumed to act concurrently with any other live load requirement. **Any use of glass/glazing material as an infill panel system must be pre approved prior to installation.**

Plastic composite guards or other manufactured guard systems - Shall be approved by the department prior to installation. A copy of the manufacturers reports or evaluation report from a third party agency must be submitted for review. This information must be present on the job site

and available during the inspection process. Installation will be verified in accordance with the manufacturer's instructions and listings of the product.

Guard Posts – Posts shall be a minimum 4x4 (nominal) No.2 or higher grade (Southern Pine, SPF, Hem-Fir, Douglas Fir-Larch) or with an adjusted bending design value not less than 1,050 psi. See below for the two methods of Guard Attachment.

IF INSTALLING GUARD POSTS THEN SEE DETAILS BELOW.

NOTE: THERE ARE SEVERAL OTHER OPTIONS AND METHODS AVAILABLE ON INSTALLING GUARDS PLEASE CONTACT YOUR INSPECTOR FOR APPROVAL – THIS IS DUE TO THE AMOUNT OF LOAD A GUARD MUST SUPPORT AS INDICATED IN THE COMMENTARY PRECEEDING THIS PAGE.

FIGURE 17
OUTSIDE JOIST

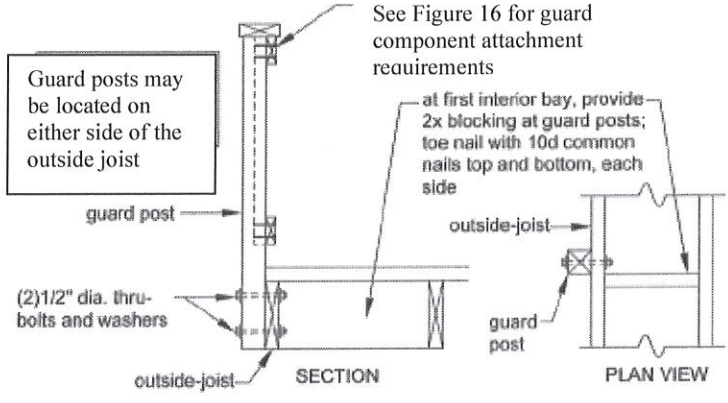

FIGURE 18
RIM JOIST OPTION 1

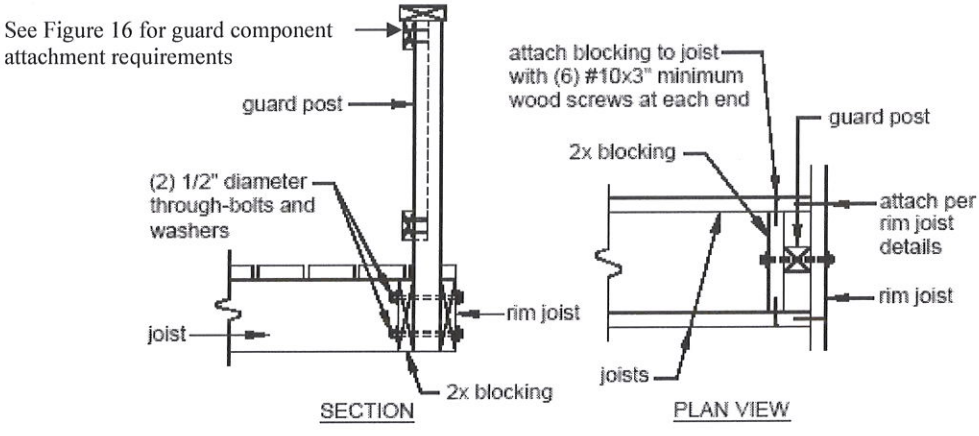

RIM JOIST OPTION 2

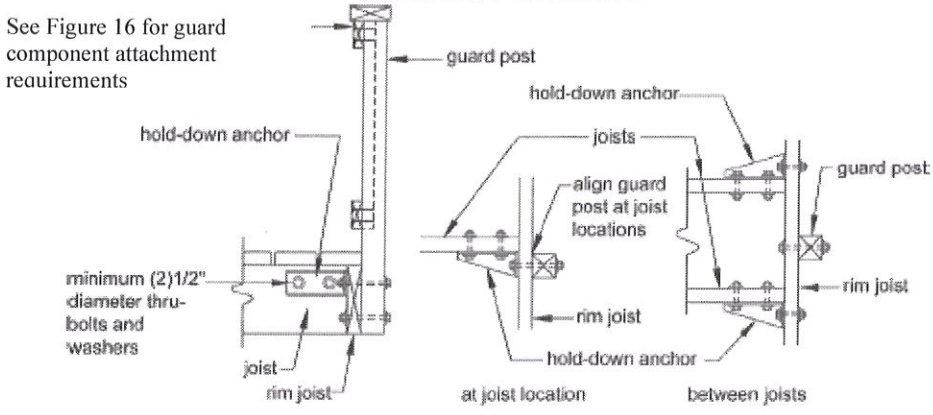

RIM JOIST OPTION 3

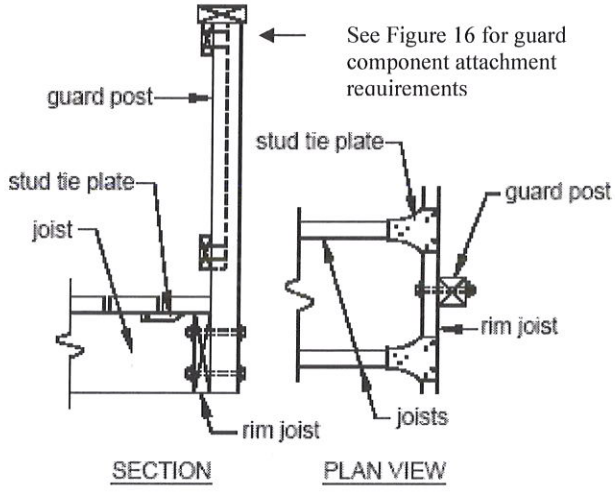

Rim joist must be attached to deck joists with 2 – 20 guage stud tie plates as per manufacturers instructions.

Stair Requirements: Stairs shall meet the following provisions as detailed in the figures. A flight of stairs shall not have a vertical rise larger than 12 feet between floor levels or landings. The grade located at the bottom of the stairway is considered a floor level. A floor level or landing shall be provided at both the top and bottom of all stairs. All stairs shall be a minimum of 36" in width. All landings shall be the width of the stairs and have a 36" dimension in the direction of travel. Landings and treads are allowed to slope a maximum of 2% (1:48). A headroom clearance height above the stairs shall be at least 6'-8"(measured vertically from the nosing of the treads).

Load Requirements – Individual stair treads must be capable of supporting 40 pounds per square foot or a single concentrated load of 300 pounds per 4 square inch area.

Stair Stringers – See figures 19, 20 and 21 for minimum stringer material and attachment requirements.

FIGURE 19

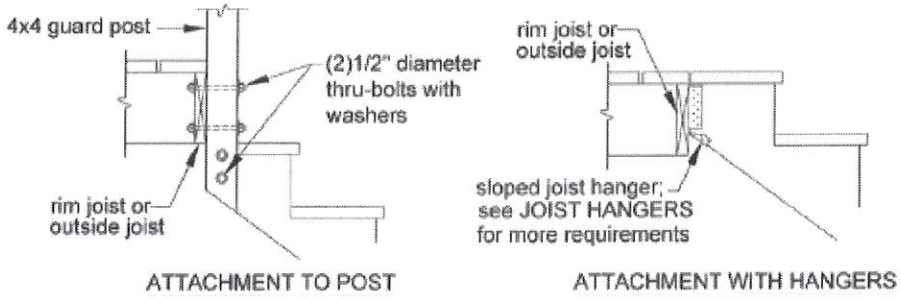

FIGURE 20

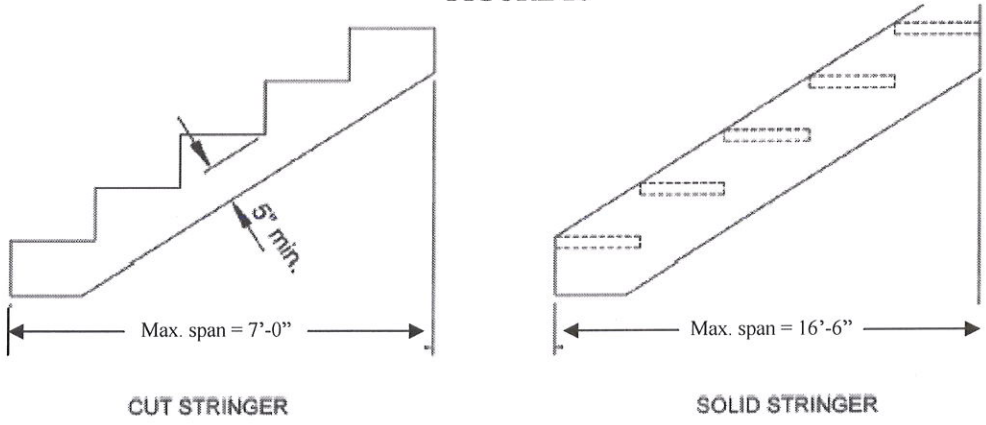

FIGURE 21

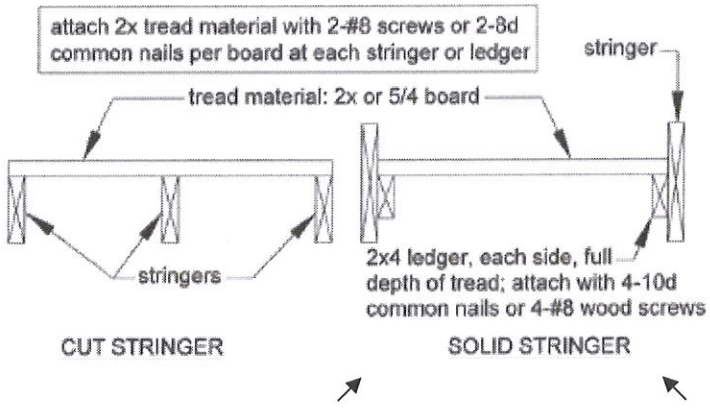

ADDITIONAL BLOCKING MAY BE REQUIRED DUE TO SPAN OF STAIR STRINGERS

Rise and Run requirements (steps/treads) – See figure 22 for details.

FIGURE 22

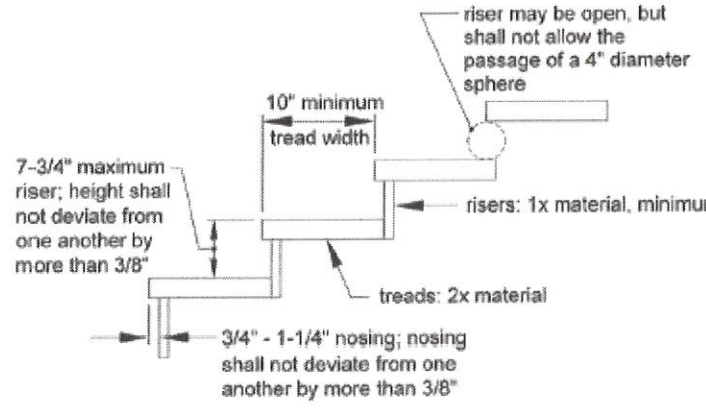

Stair Guard Requirements – A guard is required on the open sides of stairs when the total stair height is more than 30" above the adjoining grade. If a guard is required then it shall extend the full length of the stairs.

FIGURE 23

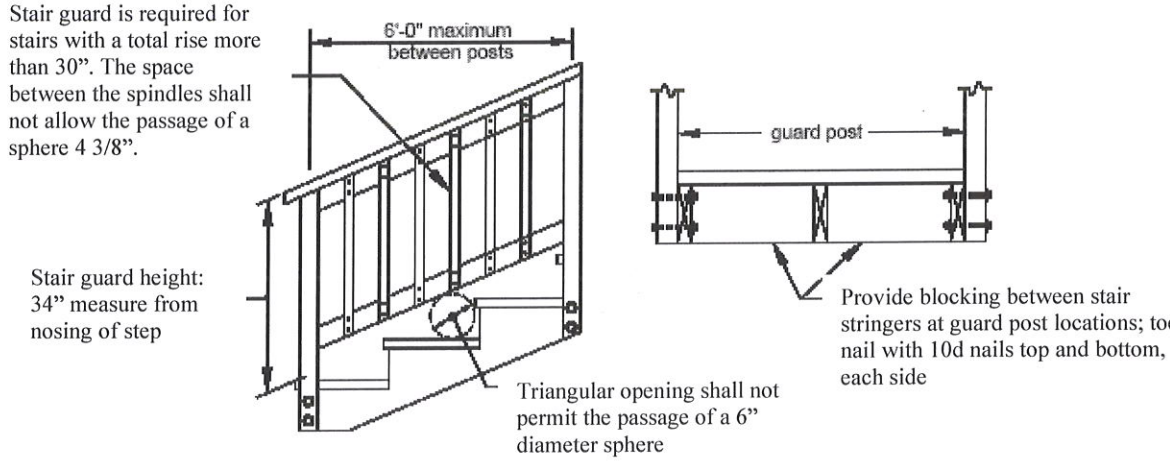

NOTE: THERE ARE SEVERAL OTHER OPTIONS AND METHODS AVAILABLE ON INSTALLING GUARDS PLEASE CONTACT YOUR INSPECTOR FOR APPROVAL – THIS IS DUE TO THE AMOUNT OF LOAD A GUARD MUST SUPPORT AS INDICATED IN THE COMMENTARY.

Stair Handrail Requirements – Any stairs which have four or more risers shall have a handrail continuous on one side for the full length of the stairway being served. The handrail may project 4.5" into the required minimum stairway width on each side. The handrail is required to support a single concentrated load of 200 pounds applied in any direction along the top. Handrails shall be returned or they shall be designed to not be considered open at the ends.

FIGURE 24

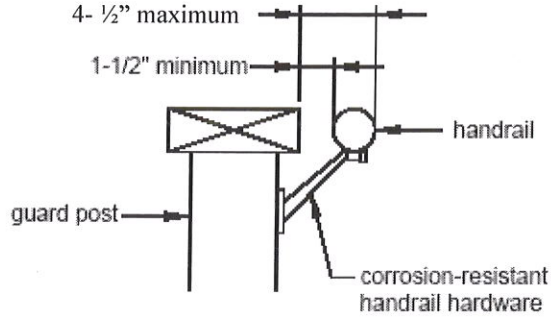

Type I Handrail - The handrail must be an approved shape for grasping while walking up or down the stairs. Handrails with a circular cross section shall have an outside diameter of at least 1 1/4" and not greater than 2". If not circular, the handrail shall have a perimeter dimension of at least 4" and not greater than 6 1/4" with a maximum cross section of 2 1/4".

Type II Handrail - Handrails with a perimeter greater than 6 1/4" shall provide a graspable finger recess (groove) on both sides of the profile. The finger recess shall begin within a distance of 3/4" measured vertically from the tallest portion of the profile and achieve a depth of at least 5/16" within 7/8" below the widest portion of the profile. This required depth shall continue for at least 3/8" to a level that is not less than 1 3/4" below the tallest portion of the profile. The minimum width of the handrail above the recess shall be 1 1/4" to a maximum of 2 3/4". Edges shall have a minimum radius of 0.01".

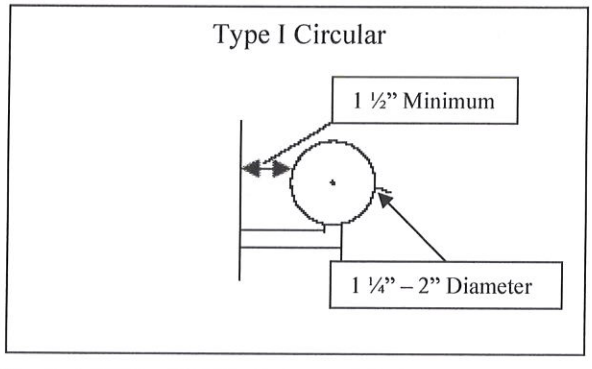

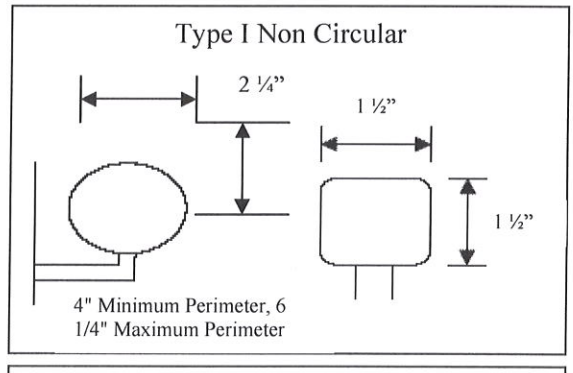

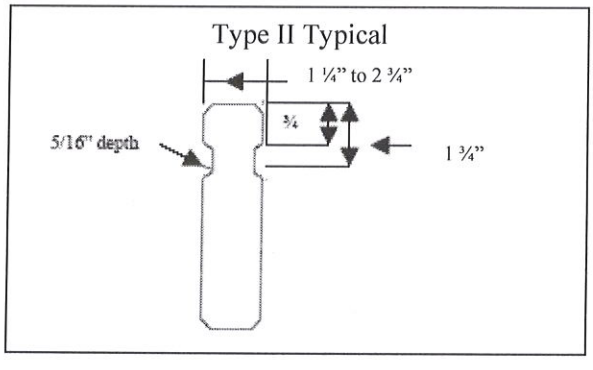

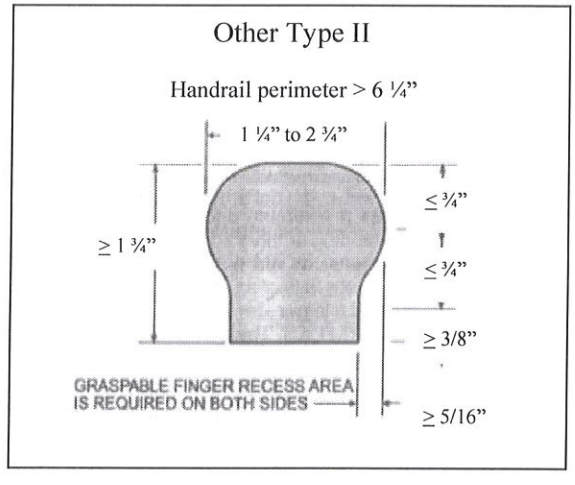

FIGURE 25

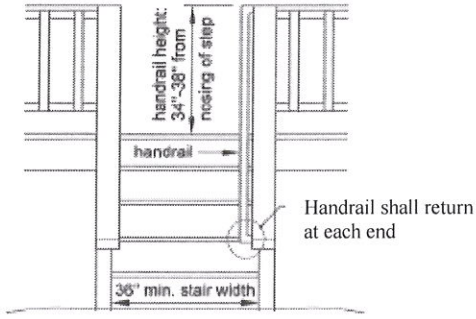

FIGURE 26

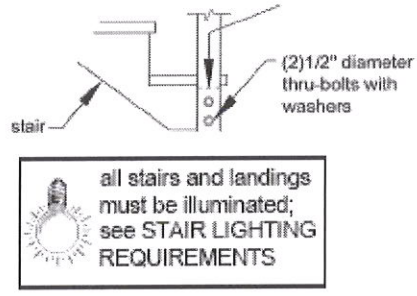

Stairway Lighting - Stairs shall have a light source located at the top landing such that all stairs and landings are illuminated. The light switch shall be operated from inside the house. However, motion detected or timed switches are acceptable.

Fireplace/Bay Window Requirements: All members at a fireplace/chimney or bay window shall be framed per Figure 27. Headers may span a maximum of 6'-0". When a fireplace/chimney or bay window is wider than 6'-0", one or more posts may be added to reduce header spans to less than 6'-0". In such cases please refer to the requirements regarding posts and footings contained within this guide.

FIGURE 27

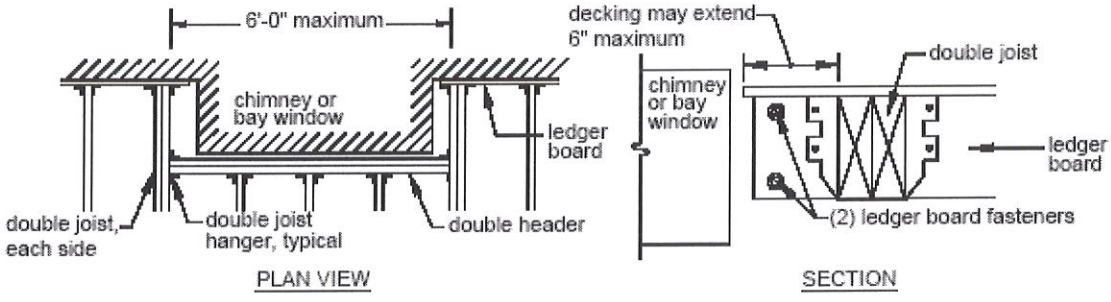

Egress Window Requirements: A deck can be installed over an Egress window provided the deck allows the egress window to be fully opened and provides for a path not less than 36" in height to a yard or court. See Figure 28.

FIGURE 28

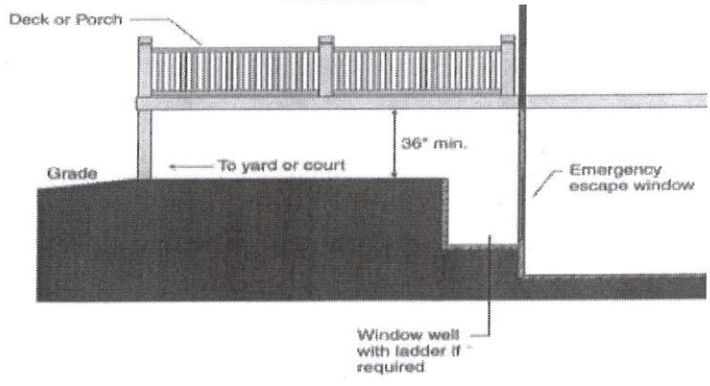

Glass Location Restrictions: Whether you are building a new deck or replacing one and you have windows near the deck platform, over the stairs, or near the top and bottom of stairs, chances are you will need to replace the glass with safety glazing.

Above the deck platform – If your window meets the following four provisions then you will need to replace it with safety glazing, typically a tempered glass window.

1. Bottom of window is less than 18" above the deck/walking surface; and
2. An individual pane is larger than 9 square feet in area; and
3. The top edge of the window is more than 36" above the deck/walking surface; and
4. One or more walking surfaces are within 36" horizontally of the glass.

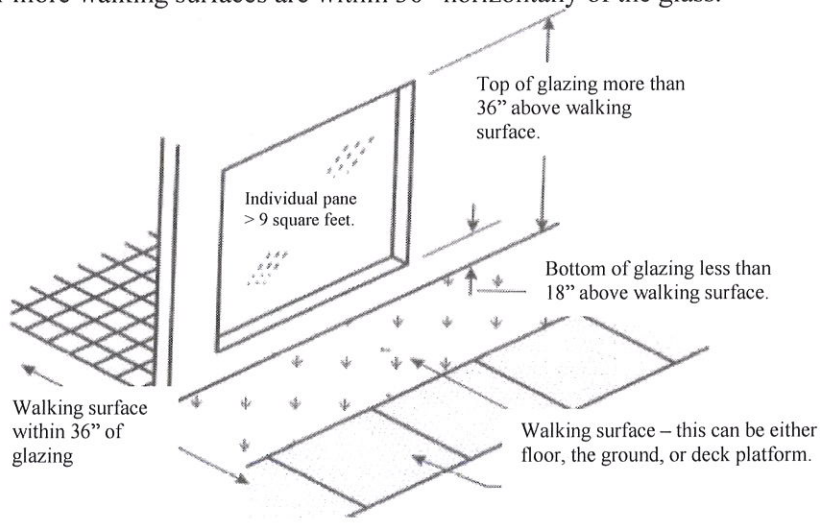

Windows above stairs/landings – If a window is adjacent to stairways, landings, and ramps within 36" horizontally of a walking surface when the exposed surface of the glass is less than 60" above the plane of the adjacent walking surface then your window will need to be safety glazed, typically tempered.

Window at bottom of stairway - If a window is adjacent to stairways and within 60" horizontally of the bottom tread of a stairway in any direction when the exposed surface of the glass is less than 60" above the nose of the tread, then your window will need to be safety glazed.

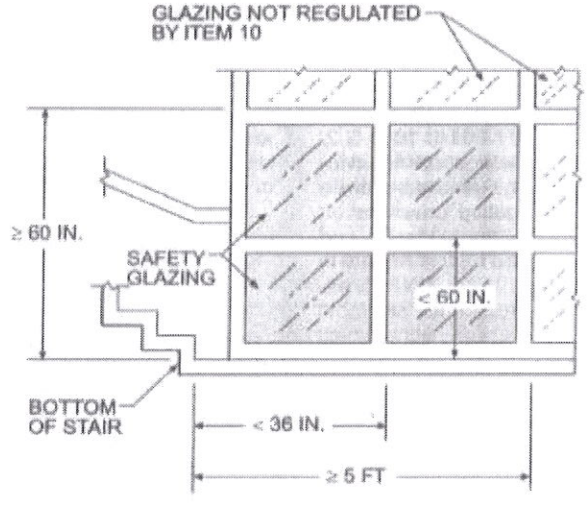

FIGURE 29